Suntactics sTracker Solar Tracking System

Owners Manual and Installation Guide

Contact info

Phone 888-308-4786

Email info@suntactics.com

Contents

Introduction

Thank you for purchasing the Suntactics sTracker solar tracking system. You will be pleased with the power output that a solar tracker can provide. Solar tracking increases solar output up to 40% over fixed installs.

The Suntactics solar tracker aims its solar panels at the sun all day long. It is robust and reliable using self lubricated bearings and standard, low power actuators, for longevity. One sTracker can produce over 10kWatt/hours a day in mid to southern latitudes spring to fall. This will really give your air conditioner a break for you folks living in hot climates. The panels are also very easy to reach for cleaning and removable for very high winds and hurricane preparedness.

Please read through all the instructions before attempting to install. There are many little items that should be completed in sequence.

Although, these instructions cover a lot of ground, there are items in which will require your own ingenuity and expertise.

SAFETY INSTRUCTIONS

FAILURE TO FOLLOW THESE WARNINGS MAY RESULT IN SERIOUS INJURY AND/OR PROPERY DAMAGE. Owners must insure there is adequate space and clearance for the solar tracker for safe operation and damage prevention.

WARNING

FAILURE TO FOLLOW THESE WARNINGS MAY RESULT IN SERIOUS INJURY AND/OR PROPERTY DAMAGE.

Owners must insure there is adequate clearance for the tracking device.

Do not climb on the tracker.

When adjusting post level, be aware of hand injury.

When installing the solar tracking structure, be aware of head injury.

Do not allow children to play around or adjust the solar tracking system.

Do no leave any obstructions near the solar tracker (i.e. a ladder)

When interconnecting to the grid, consult with a local code inspector or professional electrician.

SAFETY INSTRUCTIONS

FAILURE TO FOLLOW THESE INSTRUCTIONS MAY RESULT IN SERIOUS INJURY, PROPERTY DAMAGE AND WILL VOID WARRANTY.

To ensure safety, do not attempt to assemble this system without following the instructions carefully. If in doubt, contact us immediately

- When using a ladder during assembly, use extreme caution.
- Two people are recommended for assembly when mounting solar panels.
- Before digging, contact your utility company to locate underground power cables, gas and water lines.
- Ensure there are no overhead lines within the area..
- Be aware of head injury during and after installation.
- When connecting to the grid, be cautious of electric shock from the service panel.
- If technical assistance is required, contact Suntactics directly
- Minimum ground clearance is 20’x 20 and 12’ in height.
- Inverter output must connect to a 20 Amp breaker.

Suggested Tools

		
Socket Assortment (7/16,1/2”,9/16”)	**Wrench Assortment(7/16,1/2”,9/16”)**	**Screw Driver Assortment**
		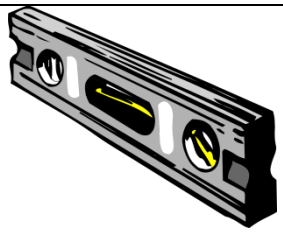
Adjustable Jaw Wrench	**Hammer for building concrete frame**	**Level for leveling post upright**
		
Hand Saw of similar for frame	**Tape Measure**	**Wheel Barrow for concrete mixing**
	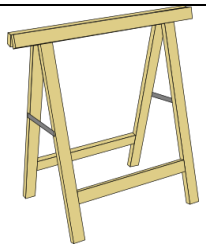	
Ladder	**Two saw horses or work table**	

Hardware Identifier Parts

Note: Some hardware parts may be pre-installed. Panel clamps not included.

			
(A) Not used	**(B) ¼-20 x 2.5” bolt (4)**	**(C) 3/8-16 x 3” Bolt (4)**	**(D) 3/8-16 x 3.5” Bolt (1)**
	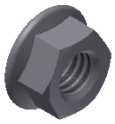		
(E) ¼-20 Nut (4)	**(F) 3/8-16 Nut (5)**	**(H) ¼-20 Washer (6)**	**(I) 3/8-16 Washer (8)**
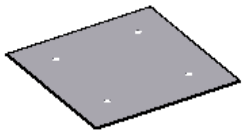			
(L) Wood Template (1)	**(M) Cotter Key(4)**	**(N) Actuator pin (2)**	**(O) N/S hitch pin (1)**
			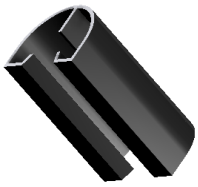
(P) E/W hitch Pin (2)	**(Q) Lock Pin (3)**	**(R) Typical Solar panel clamp (12)**	**(S) Typical Panel stop sleeve (8)**
			
(T) Panel rail cap RT (4)	**(U) Panel rail cap LFT (4)**		

Solar Tracker Sub-Assemblies

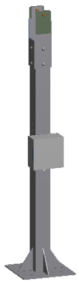	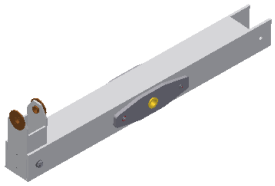	
1 Main Post (1)	**2** Axis 2 Pivot beam (1)	**3** Axis 1 Actuator brace (1)
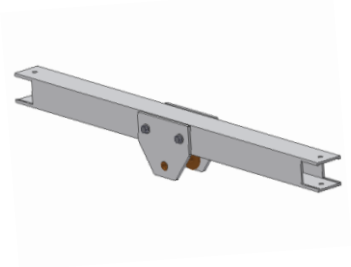	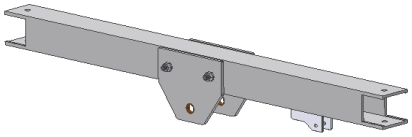	
4 Axis 1 pivot beam (1)	**5** Axis 1 pivot beam with Actuator bracket (1)	**6** Solar Beam (2)
	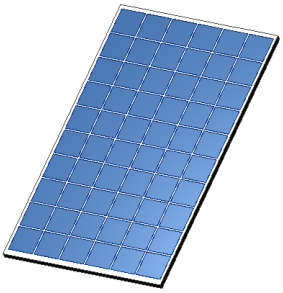	
8 Solar Panel Railing (4)	**9** Solar Panel (4) if applicable	
		
10 Tracking sensor (1)		

Post Installation

Perhaps the most important step of the installation is anchoring the vertical post. There are a few ways you can do this. One way is to build a pier with a hole which is illustrated here. Another way to is to place the post on a cement pad. Recommend pad size is 6'x 6'x 6" with an additional 6" deep skirt around the perimeter. We have had customers just mount it to an existing thick driveway like pad using molly bolts.

With all projects like this, you may want to check with your local permitting department before proceeding. Regardless, constructing a pier that consists of a 3-4 foot deep hole filled in with concrete, reinforced rebar, and L-bolts should be sufficient.

Tracker Post Installation with a Concrete Hole

WARNING

Before digging hole, check for buried power, gas, water, and telecommunication lines! Failure to do so could result in serious or fatal injury! Contact your local utility company if unsure.

Items supplied from owner for pier mount application

These items are easily acquired from your local hardware store.

	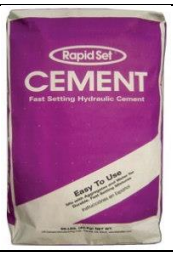	
3 foot (1/2") Rebar, 4 pcs	**11- 60lb bags of cement**	**Post Hole Digger**
	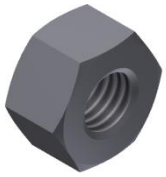	
12" – 14", 5/8" L-bolt (4)	**5/8-11 Nut (12) Galvanized**	**5/8-11 Washer (12) Galvanized**

Before you mount the post, make absolutely sure that you have a clearance perimeter of 15' x 15' for the solar tracker. And most importantly, place the tracker in an area with no shadows from trees and buildings from sun-up to sun-down. The solar tracker will produce full power if it can see sun from dawn to dusk conditions.

If you are a hands-on person, installing the post anchor should be a relatively easy task. Once you read through the instructions, you should be able to see what we are trying to accomplish here.

1) Build a 20” x 20” (inside dimension) square form with 2 x 4’s and nails or screws.
2) Dig a hole 3-4’ deep and 18” in diameter, Place the frame on the surface. **Use a compass and aim one edge in the general South direction.** Stake the frame into the ground.
3) Level the frame and use a saw to cut stakes flush with the frame top edge.

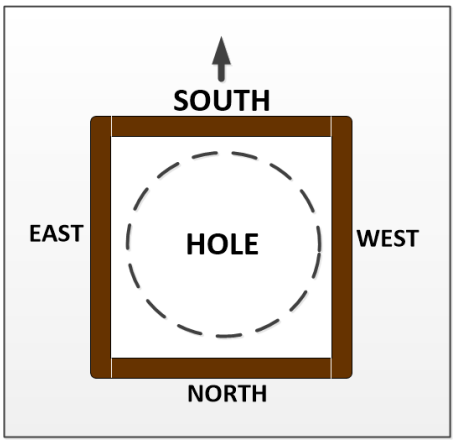

4) Prepare the wood template(L) assembly with 4 L-Bolts and 8, 5/16-11 Nuts.

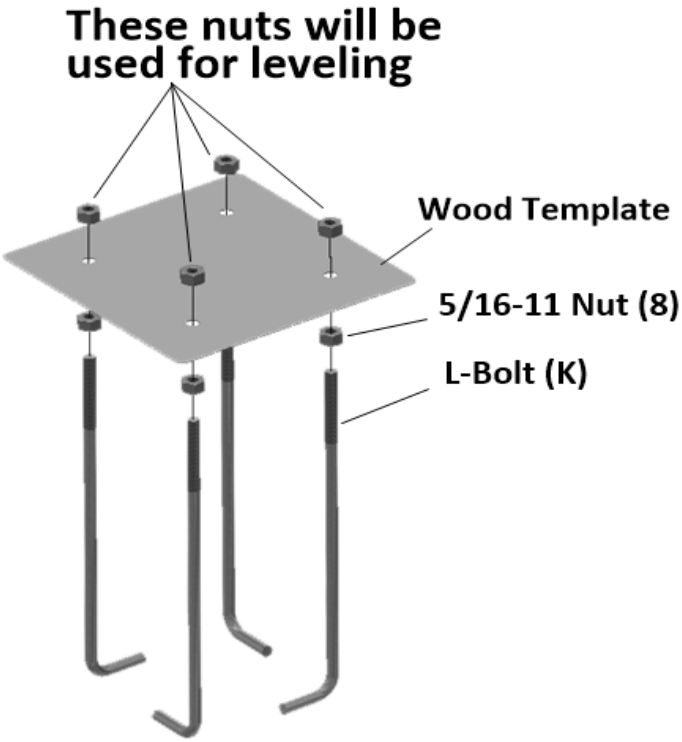

5) Prepare cement mix in wheel barrow. It will take a few loads. Fill hole with cement and stop about 12” short from the surface. Insert four ½ ‘ x 2-3 feet in length rebar rods (#40) into cement. Space 8-10” apart.

6) Fill the hole to the top. Level off the cement with a scrap piece of wood using the frame top edge as a guide.

7) Use the template assembly in step 4 and push it into the cement all the way down to mate with the surface. The bottom 4 nuts will be forever embedded in the cement.

Do final cleanup and let concrete set for a couple days depending on temperature. Remove the frame and lets then anchor the post!

Anchoring the Post to Pier

1) Remove top nuts from template and remove top template.
2) Install 4 Nuts (G) to L-Bolts and place 4 washers (J) on top of the nuts.

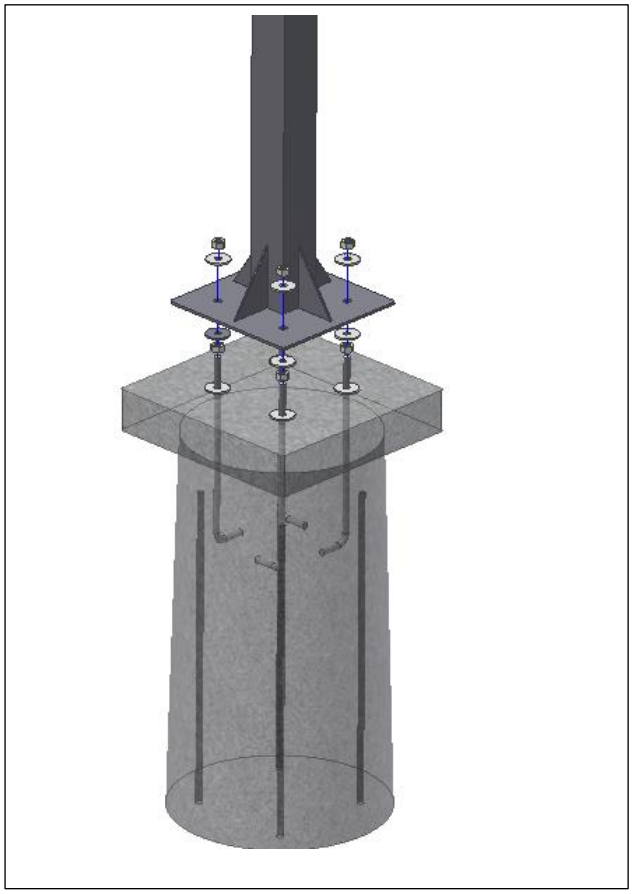

3) Place post onto the bolts. Make sure the south indicator on the post is facing south. ***For added reference, the actuator on the post also faces south.***

Place 4 washers (J), and 4 nuts(G) to post mounting plate. Adjust bottom and top nuts to level post.

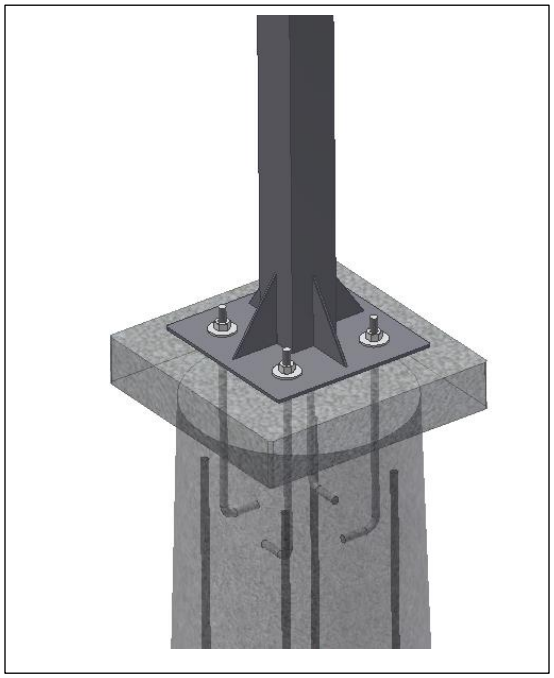

North/South Pivot Bar Installation

							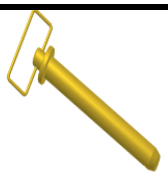
D – (1)	**I – (1)**	**F – (1)**	**H – (1)**	**M – (1)**	**(N) - (2)**	**Q – (1)**	**O – (1)**

Place pivot beam “2” on post and insert a hitch pin “O”. Attach “Axis 2 Actuator” to pivot beam “2” using washer and cotter key. Install actuator brace “3” to pivot beam “2” with D,I,F fasteners.

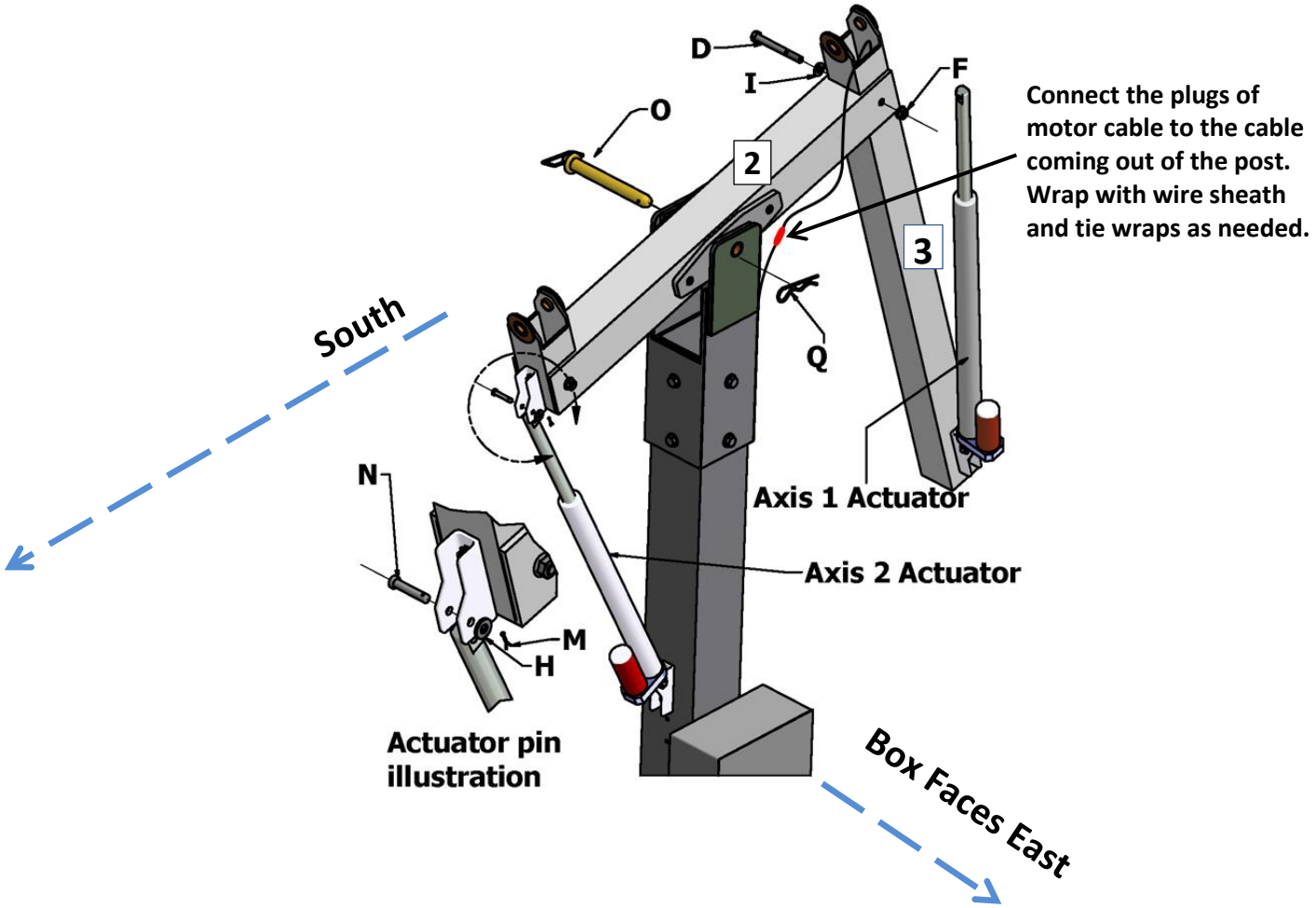

East/West Pivot Bar Installation

				
(N) - (2)	**H – (1)**	**M – (1)**	**P – (2)**	**Q – (1)**

This step requires pivot bars 4 and 5. Cut tie-wraps holding the large thrust washers. Slide pivot bar plates over thrust washers until holes match. Add some grease to the hitch pins before installing. Snap clip to pins.

Using a stiff wire (coat hanger type wire, et) pull the actuator power wire through the post and out the large hole mid post exit hole.

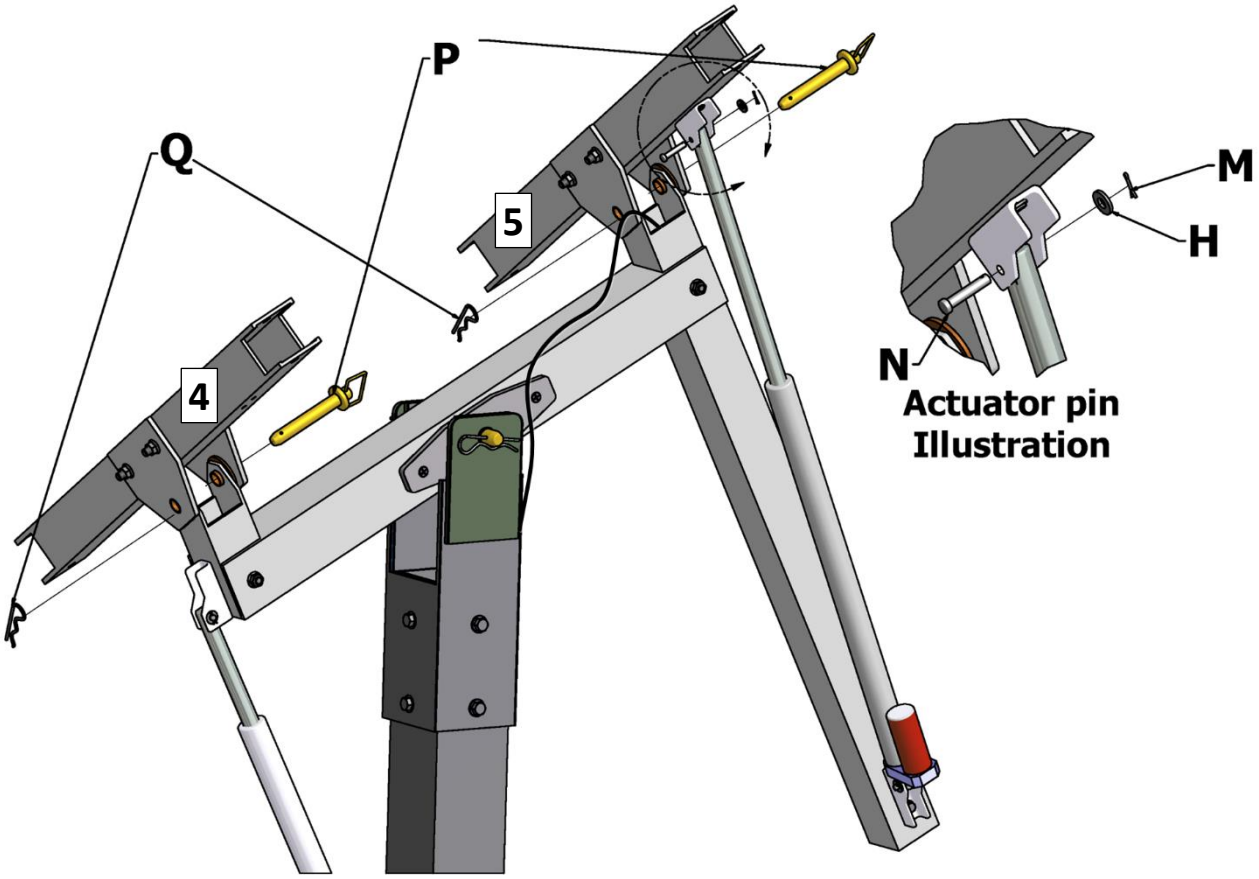

Solar Actuator Activation

Being able to move the actuators are necessary for the upcoming installation procedures. This section shows how to activate and control the actuator movement for ease of installation. For instance, you can manually move the solar tracker flat so it is easier to mount the solar panels.

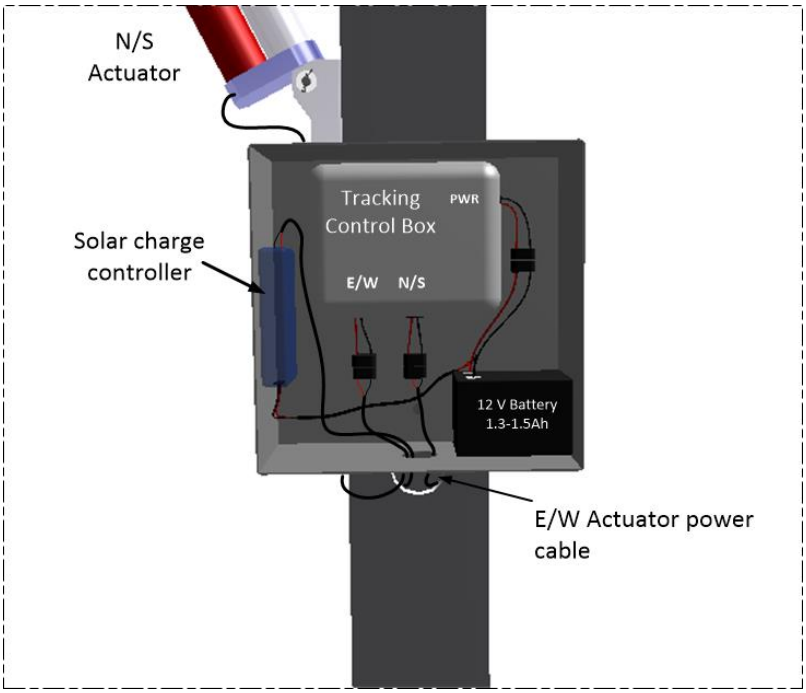

Remove the lid from the box. Plug in the loose end connector to the battery to provide power to the controller unit.

Solar Tracker App

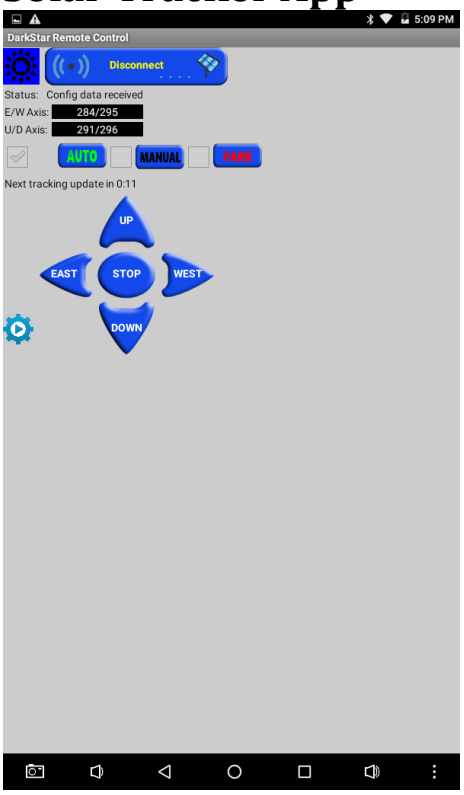

Remove lid from control box

1. Power up the tablet and start the Darkstar app. Box lid must be open to connect Bluetooth to Darkstar controller.
2. Connect the connector near the battery to power up the solar tracking control box.
3. The LEDs on the tracking controller will turn on and the actuator motors will do a short test run back and forth.
4. After this, you should see some blinking LEDs to the lower left in the controller. This is the Bluetooth connection board.
5. Push the Connect button on top of the Darkstar App and the choose Darkstar-xx from the list. “xx” being the tracker number(useful for multiple trackers).
6. When it connects, the LEDs will stop blinking. If you have multiple trackers, you will see more connection choices.
7. Once connected, click the Manual button and wait a couple seconds.
8. Now you should be able to use the East/West, Up/Down buttons. You can now move the solar tracker to positions that make it easier to install the rest of the structure and solar panels themselves.
9. More info about tracking configuration later.

Solar Panel Beam Installation

		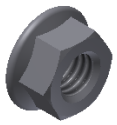
C – (4)	**F – (4)**	**I – (4)**

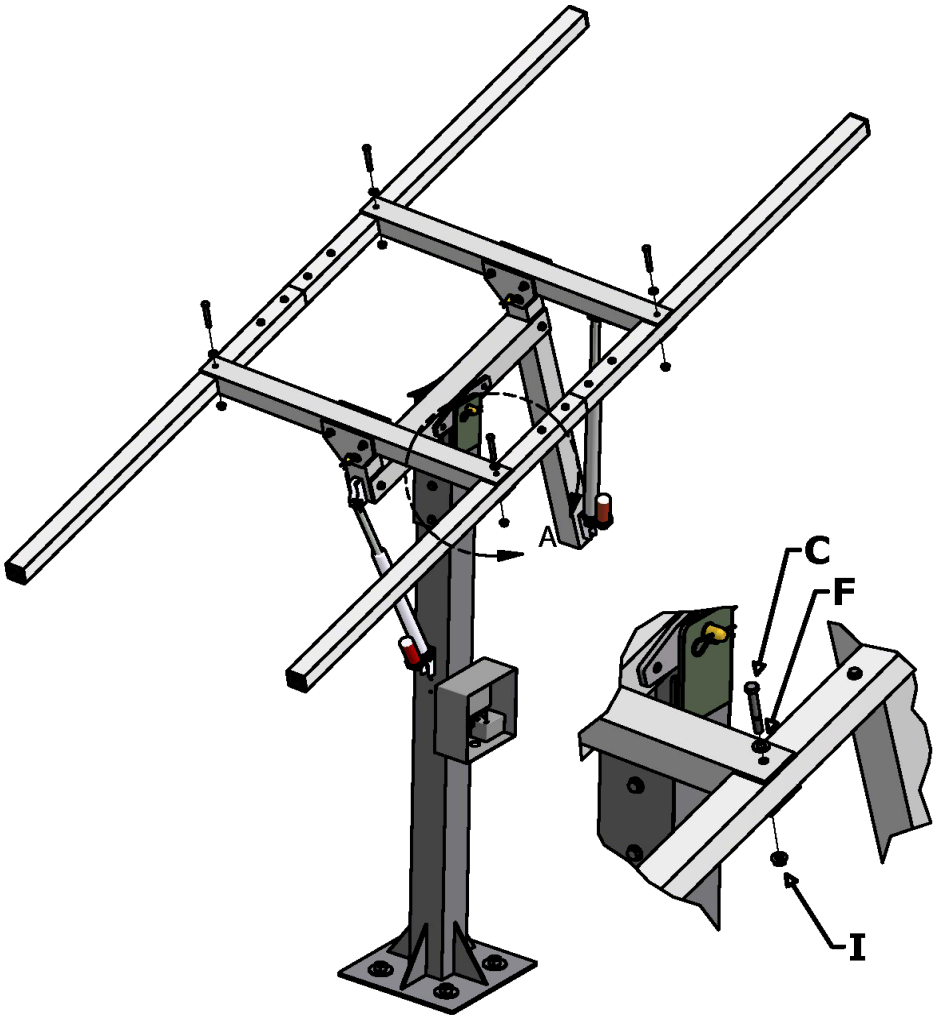

Solar Panel Rail Installation

Use 4 solar panel rails (item 8)

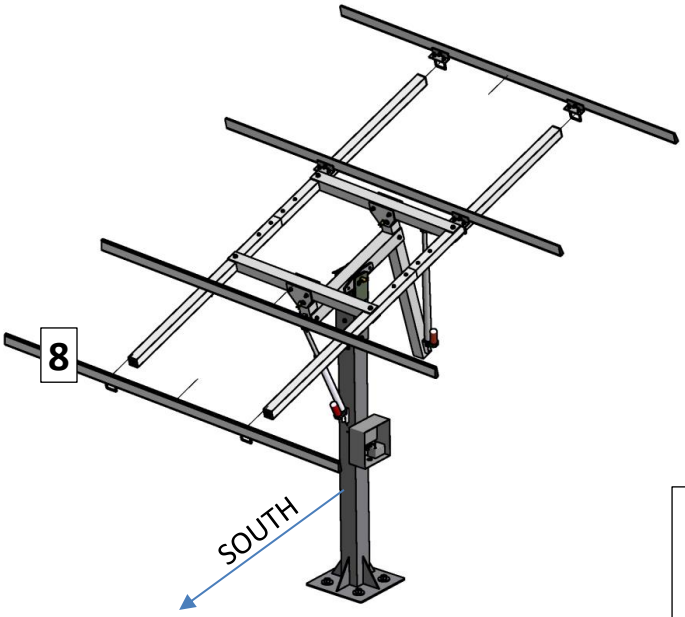

Slide panel rail Square-bolts onto panel beams. Loosen the “L” bracket nuts as needed to center rails to the beams. Evenly space the rails side to side.

Note: The rails mount the opposite direction on each side of post.

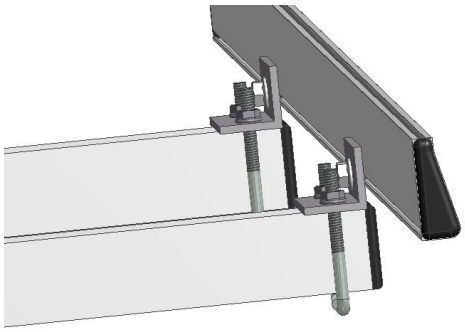

Mount outer l-brackets flush with end of square tube

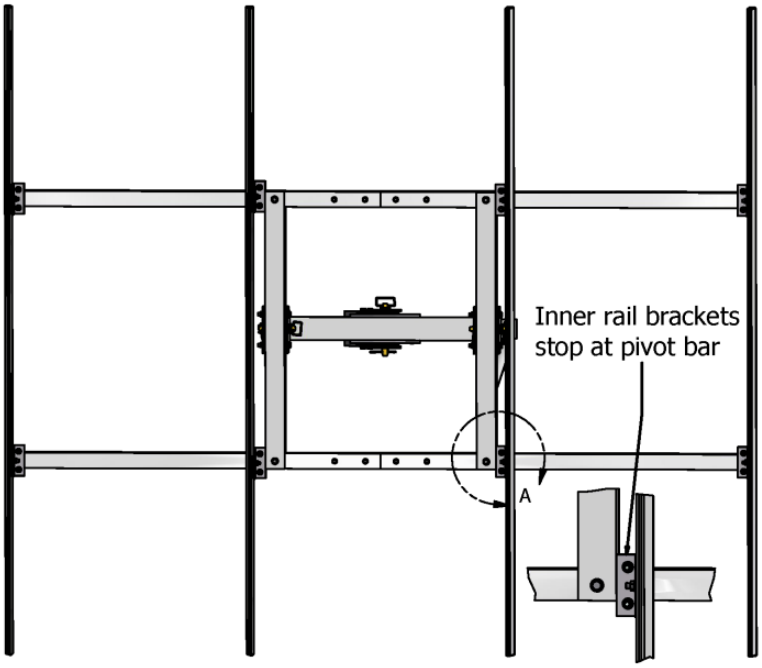

DETAIL A

Solar Panel Installation

Two people are recommended to lift the panels onto the rails.

Adjust the tracking structure to a flat position and place all four panels on top. Or one at a time depending on your preference and the mounting clips you are using.

Once all four solar panels are placed on top of the solar tracker, they need to be moved around and centered. The center of the four solar panels joined should be close to the center of the post. Using a tape measure or long ruler, move the panels around until they are all centered on the structure. They should also be centered on the four panel rails with about a 2” clearance on each end.

If you purchased the full solar tracking system with panels, all the clamping fasteners are included. If you purchased the solar tracker alone, you may need to use Ironridge mounting hardware. The solar tracker frame includes Ironridge rails.

Typical solar mounting hardware for securing solar panels to solar tracker. These are not included with solar tracker “frame only” configuration. You will need to provide your own clamps depending on the solar panels you choose. These illustrations are Ironridge solar panel fasteners.

	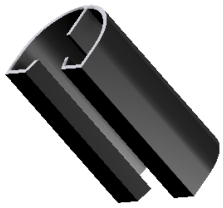
R - panel clamp (12)	**S - Panel sleeve (8)**

Panel mounting illustrations:

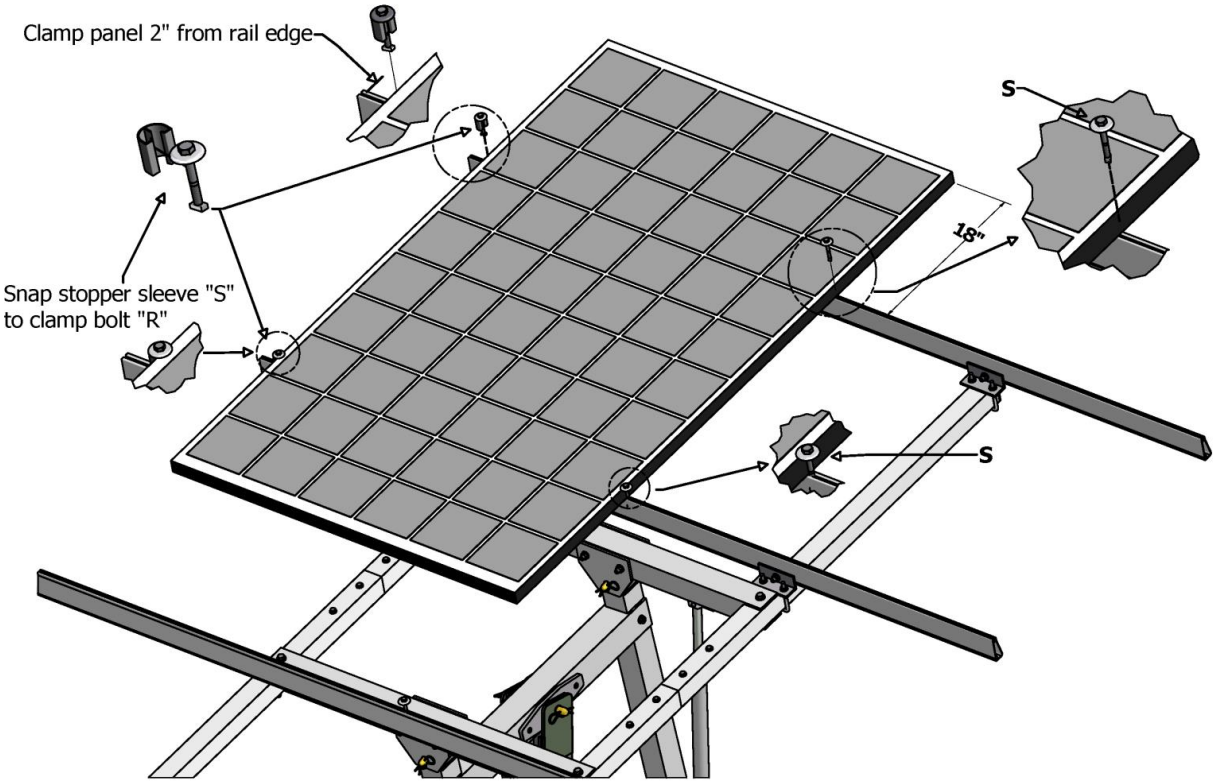

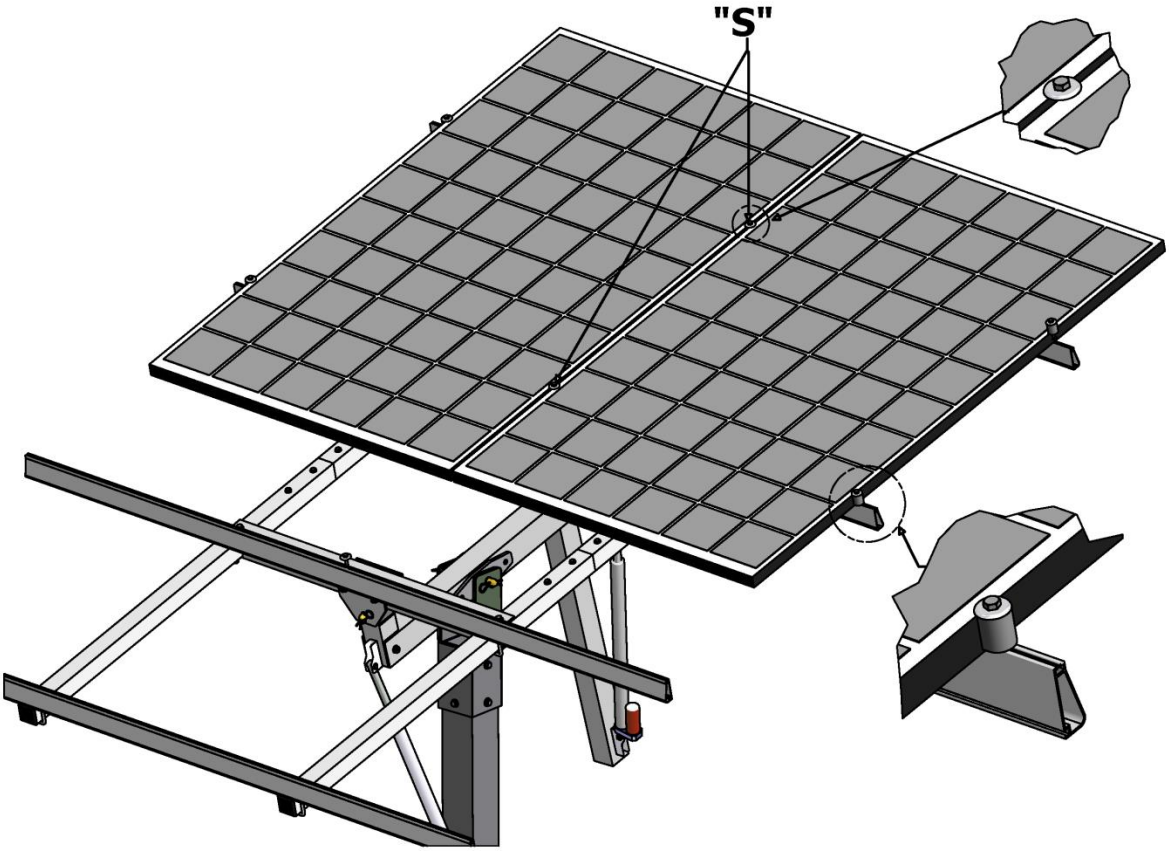

	
T – (4)	**U – (4)**

Once all panels are in place check all clamp bolts for snugness. Install the 8 plastic end caps. The solar tracker main assembly is now in place.

One panel is tapped to charge the tracking controller battery. The power needed from the one panel is minuscule for the electronics power needs. There are two y-connector harnesses that aid for the controller power hook up. Plug two y-connectors to inverter, then plug panel output to y-connectors. Refer to electrical diagram.

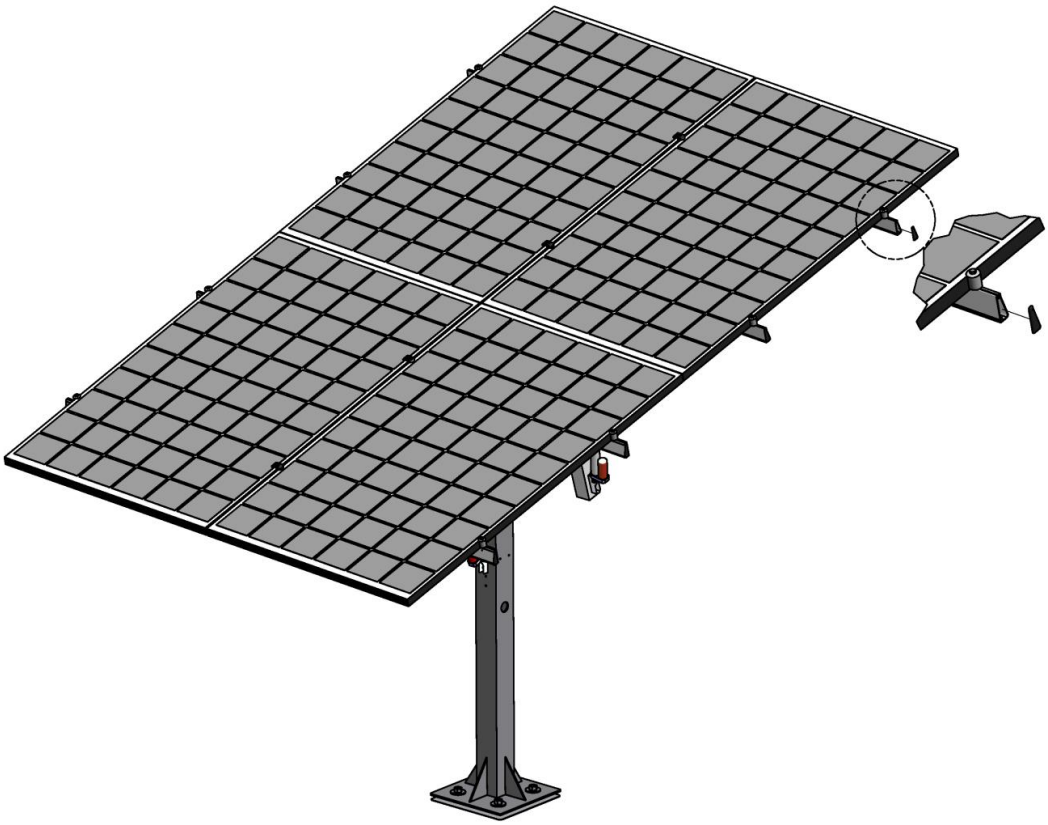

Tracking Sensor Installation

Tracking sensor (item 11) tie wraps into the solar panel frame holes with 2 tie wraps (included). The tie wrap weaves through the solar panel frame holes and across the panels frame surface under sensor post, then around top of sensor post. Sounds complicated but this is a situation where your ingenuity is required.

Mounting the sensor

Connect the tracking sensor cable

Ultimately the sensor cable needs to get into the enclosure box and connected to the tracking control.

Guide the sensor cable along the bottom of the panels, over the top of the tubes to reach the hole in the top of the post.

Remove and pull back the plastic “L” shaped conduit from the bottom of the control box by unscrewing the big nut. You may need to use a screwdriver tip and hit it slightly with a hammer to loosen. Wiggle and pull the whole conduit piece out with the wires.

.

Push the sensor cable down the pole until it reaches the hole below the enclosure box. Reach in with your fingers and pull the cable through.

Now push the end of the sensor cable plug through the conduit tube until it comes out the other end and then pull about 6” or so out the conduit tube

Run the sensor cable through the bottom hole of the enclosure box and plug it into the connector on the left side of the tracking controller box. Put the conduit assembly back in place with the nut.

Turn on Solar Tracking

Using the Darkstar control app, connect to the tracker control as previously instructed. Once the app is up and running and Bluetooth connected, click “Auto”. The solar tracker should start its movement towards the sun. It may take a few iterations, but the tracker will eventually find the sun and continue to do so every day.

Actuator Battery Y-Connectors

The tracking actuator motors are solar powered with battery assist for the actuators. The actuator motor power requirements are miniscule so don't worry. The wiring diagram on the last page should give a better understanding as well.

Using "Y-Cables", power is tapped off one of the solar panels of your choice. There are two y-connectors at the top of the post in which you will connect to one of the four solar panels on the tracker. One positive the other negative. Plug the solar panel pos(+) and neg(-) to the y-connector. Important!! Make sure to connect to the solar panel to the y-connector's "Solar Input". The other end of the y-connector is for solar output.

The connectors will naturally plug into the solar panel with standard MC4 connectors. And the other end of the y-connectors(pos,neg) provided the DC output of the solar panel using MC4 connectors. A smaller cable runs through the post and is connected to the small blue box within the main electrical box. The blue box contains the charge controller to charge the actuator battery.

Advanced Tracking Control Settings using DarkStar Tablet App

Your tracker will track exceptionally well with the factory settings. But if you are one that likes to fiddle around, read on. You may see some settings that refer to pulses. The sTracker does not use pulse type actuators. The sTracker utilizes limit switch actuators.

Tracking Configuration Section

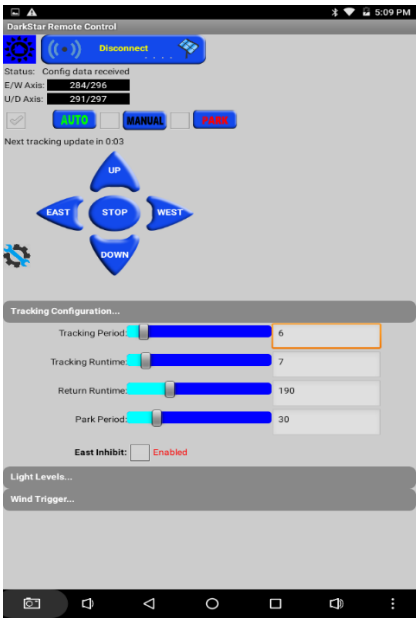

Tracking Period: Time between tracking

Tracking Runtime: How long the motors will run between tracking

Return Runtime: Reset motor runtime to morning placement

Park Period: How long the actuators will run to reach morning reset. Leave this one one.

Light levels Level Adjustment

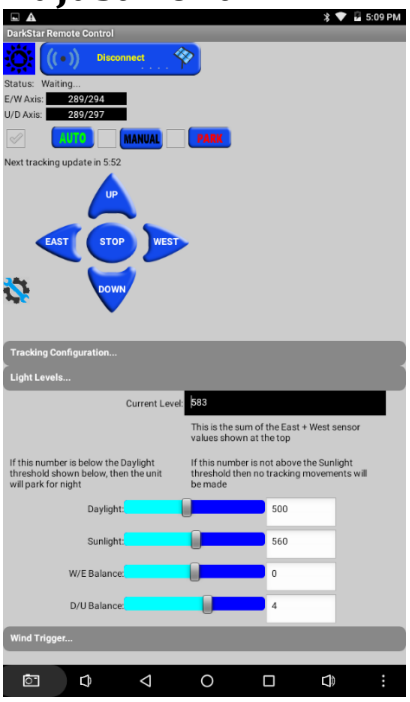

Setting light levels to control when and when not the tracker tracks.

Setting the light levels also tames the tracker a bit in overcast conditions. We have preset the controller for most average conditions, but you can adjust the settings using the controller app.

"Current Level" Indicates the total light level from the sensors

"Daylight" (below this value, tracker will stop, ~1200-1400(overcast))

No Tracking Zone

"Sunlight" (above this level, tracking will continue (=>1600))

Tracking Calibration

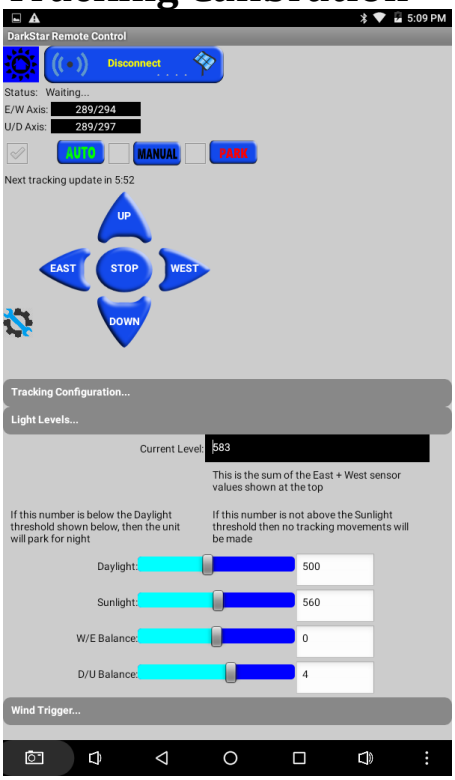

You will most likely never need to adjust settings.

There are two balance settings that are used to calibrate the accuracy of the tracker. W/E and D/U.

If the sensor is not aiming directly at the sun, these two settings allow you to calibrate to almost exact aiming of the tracker. Use small increments. You will need to wait in between tracking cycles to view the results.

Solar Tracker Electrical Diagram

Use this diagram as a reference. A typical setup with micro inverters. Note the Y-connectors and how they connect to one of the panels.

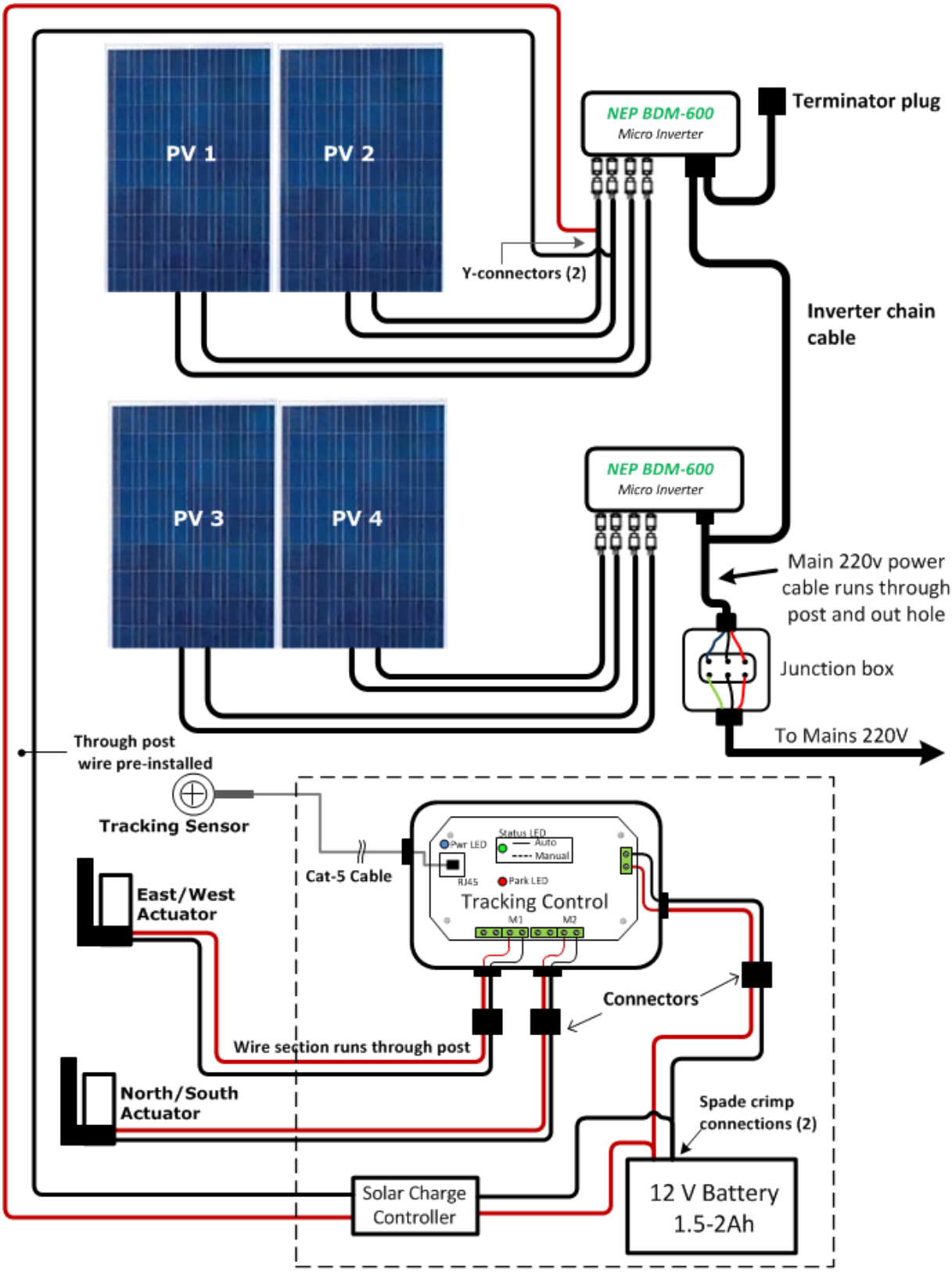

Solar tracker electrical diagram. Suntactics copyright all rights reserved 2017